KitchenAid®

5 QT STAND MIXER

MODELS:

5KPM5CER0 (Empire Red)
5KPM5CWH0 (White)

新客行
CUSBEST

04/29/2016

Part No. W10891284 Rev. A

CASE, GEARING AND PLANETARY UNIT PARTS

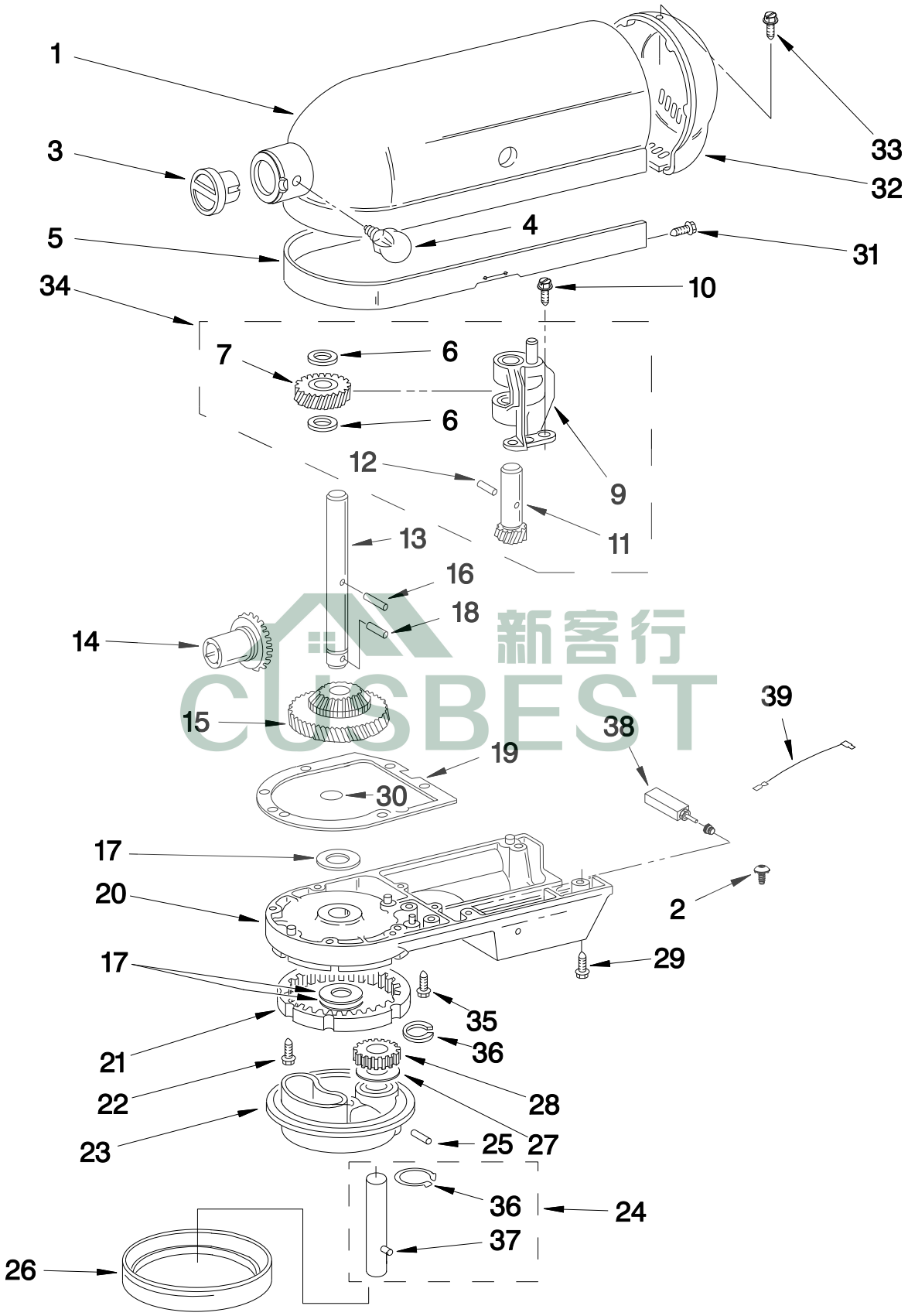

新客行 CUSBEST

CASE, GEARING AND PLANETARY UNIT PARTS

Illus. No.	Part No.	Description
1		Gearcase Motor Housing (Refer to Color Variation Parts Page)
2	3400834	Screw
3		Cap, Attachment Hub
	242765-2	Chrome
4		Thumb Screw
	9709194	Black
5		Band, Trim (Refer to Color Variation Parts Page)
6	W10323373	Washer, Fiber
7	W10112253	Gear, Worm
9	240308	Bracket, Worm Gear and Bearing
10	3400022	Screw
11	240210-2	Gear, Pinion and Shaft
12	9705444	Pin, Grooved
13	240026	Shaft, Vertical Center
14	9705130	Gear, Attachment Hub
15	9709627	Gear, Center Bevel Pinion
16	240018-1	Pin, Agitator Shaft
17	W10323378	Washer
18	9705443	Pin, Grooved
19	4162324	Gasket, Transmission
20		Lower Gear Case (Refer to Color Variation Parts Page)
21	9703904	Gear, Internal
22	9708651	Screw
23		Planetary (Refer to Color Variation Parts Page)
24	3184052	Shaft, Agitator
25	240018-1	Pin, Agitator Shaft
26	240285	Ring, Planetary Drip (Standard)
27	9706090	Washer
28	9703903	Gear, Pinion
29	9708652	Screw
30	67500-55	"O" Ring
31	311932	Screw
32		Cover, End (Refer to Color Variation Parts Page)
33	241877	Screw
34	240309-2	Worm Gear Bracket and Gear Assembly
35	9708653	Screw
36	9703438	Ring, Retaining
37	9704677	Pin, Groove
38	9705132	Filter, RFI
39	9702311	Lead, Filter

新客行
CUSBEST

BASE AND PEDESTAL UNIT PARTS

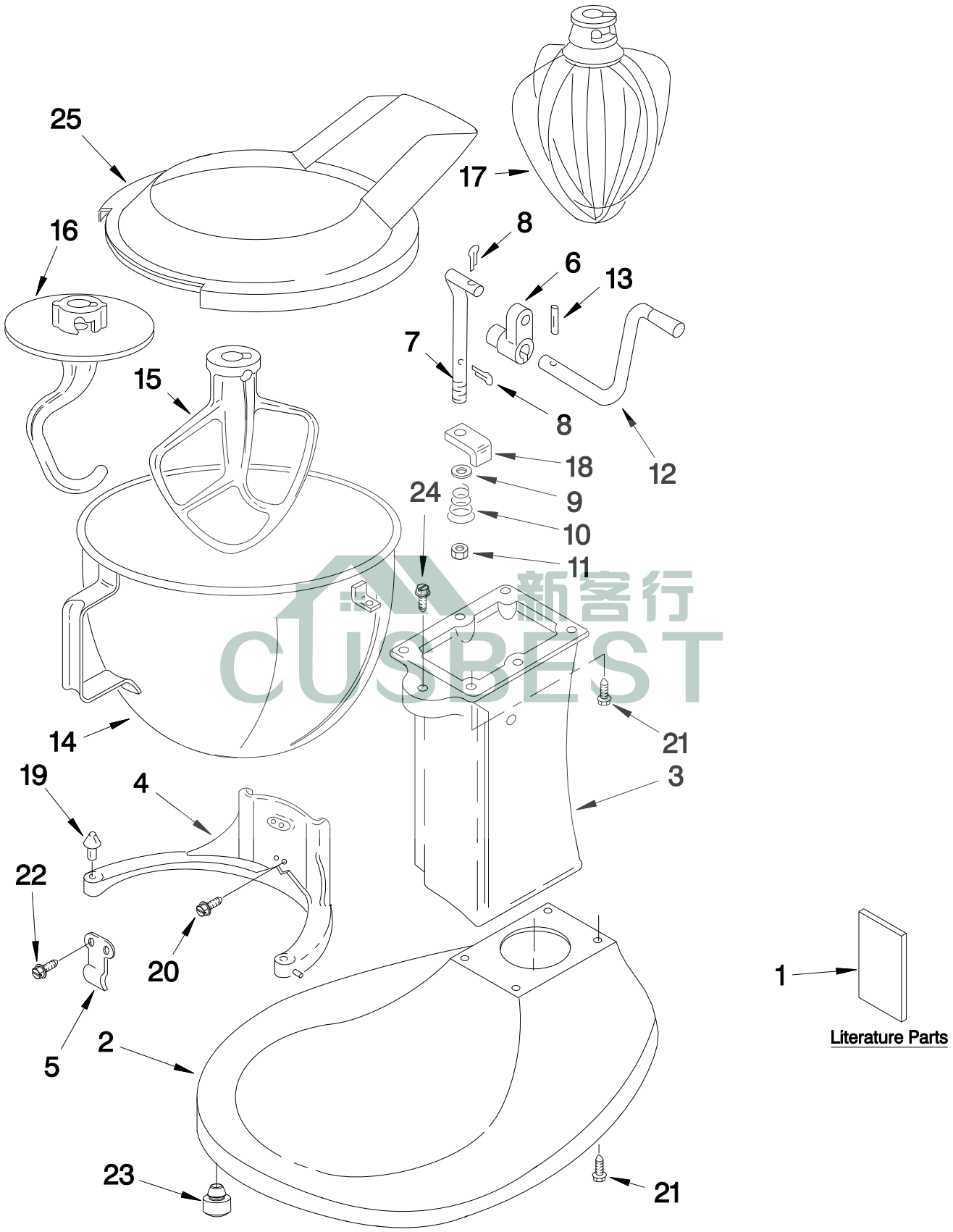

新客行 CUSBEST

BASE AND PEDESTAL UNIT PARTS

Illus. No.	Part No.	Description
1		Literature Parts
	W10399721	Use and Care Guide
2		Base & Foot Supports
		(Refer to Color Variation Parts Page)
3		Column Assembly
		(Refer to Color Variation Parts Page)
4		Bowl Support
		(Refer to Color Variation Parts Page)
5	3182857	Latch, Bowl Spring
6	241764	Arm, Bowl Lift
7	W10598834	Rod, Bowl Lift
8	9704608	Pin, Cotter
9	W10260809	Washer
10	9237	Spring, Lift Rod
11	8533907	Nut
12	W10598843	Handle, Bowl Lift
13	9703442	Pin, Roll
14	W10714131	Bowl, 5 Quart
15	W10672618	Beater, Flat
16	W10674619	Hook, Dough
17	W10731415	Whip, Wire
18	240169	Bracket, Bowl Lift
19	240185	Pin, Retaining Bowl
20	3400018	Screw
21	240912	Screw, Special
22	3400024	Screw
23	9708649	Foot
24	3182904	Screw
25	W10616906	Shield, Pouring

新客行
CUSBEST

MOTOR AND CONTROL UNIT PARTS

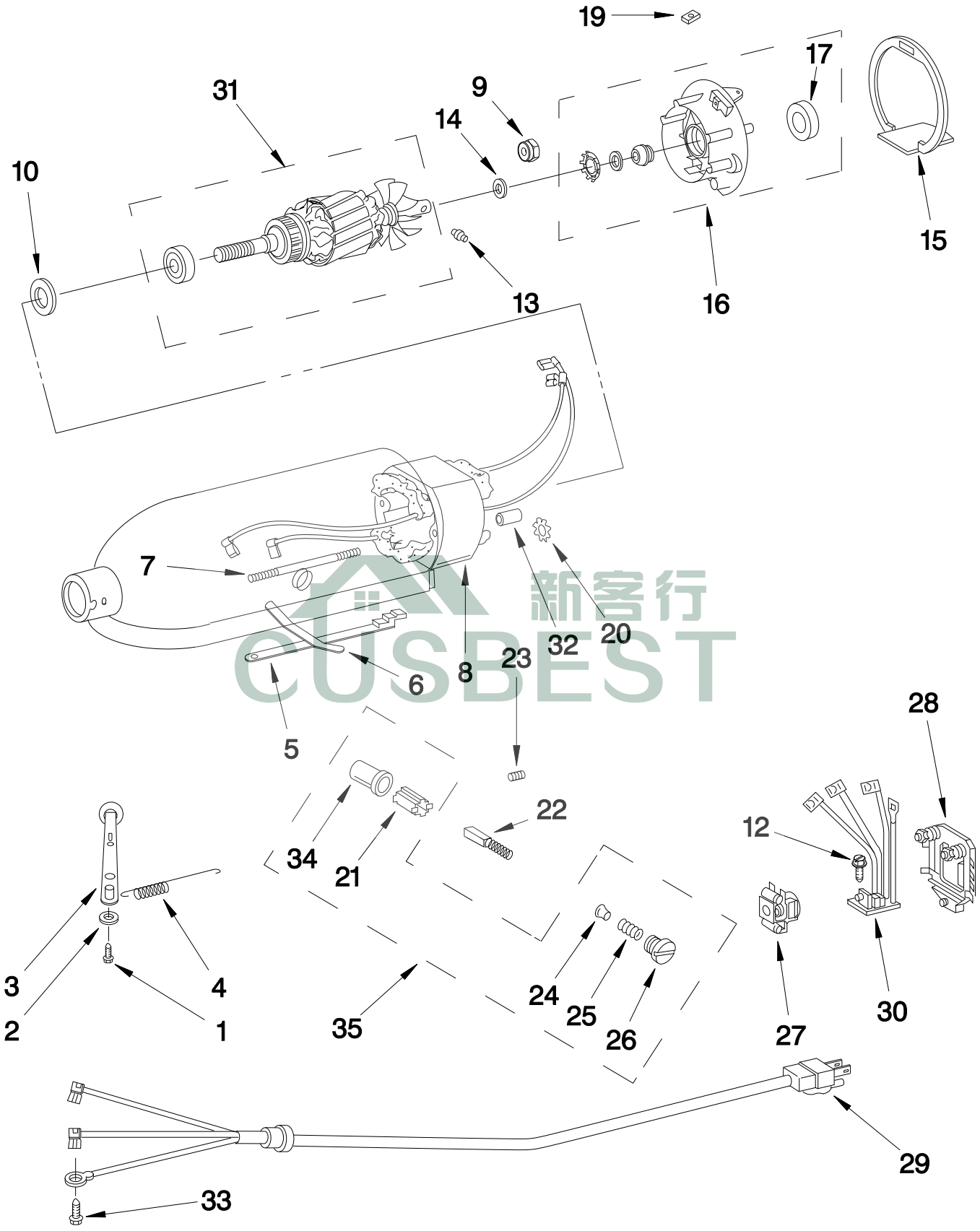

新客行 CUSBEST

MOTOR AND CONTROL UNIT PARTS

Illus. No.	Part No.	Description
1	110679	Screw
2	116241	Washer, Spring
3		Control, Speed Assembly
	9709276	Black
4	3183680	Spring, Control Plate
5	3184176	Link, Speed and Cam Assembly
6	240205	Spring, Flat
7	240769	Screw, Stator
8	W10477033	Field Assembly, 240 Volt
9	W10131078	Nut
10	9704324	Washer, Ball Bearing (Front)
12	W10068260	Screw
13	16998	Stud, Governor Drive
14	W10323376	Washer, Spacing
15	9701501	Seal, End
16	3180526	Bearing and Bracket Assembly
17	3180238	Washer, Felt
19	9701584	Seal, Foam
20	W10068270	Washer, Lock
21	240680	Insert, Brush Holder
22	W10380496	Brush, Cap and Spring
23	9707926	Screw, Set
24	116286	Spring, Seat-Cap
25	116287	Spring, Cap
26		Cap, Brush Holder
	3184212	Black
27	W10330804	Governor Assembly
28	W10119326	Control Plate Assembly
29		Cord, Power
	W10240586	Black (China)
30	W10354309	Phase Control, 230 Volt
31	W10477041	Armature and Bearing Assembly, 240 Volt
32	4162634	Sleeve, Motor Stud
33	3184609	Screw
34	3179908	Housing, Brush Holder
35	4162546	Brush Holder Assembly

新客行
CUSBEST

COLOR VARIATION PARTS

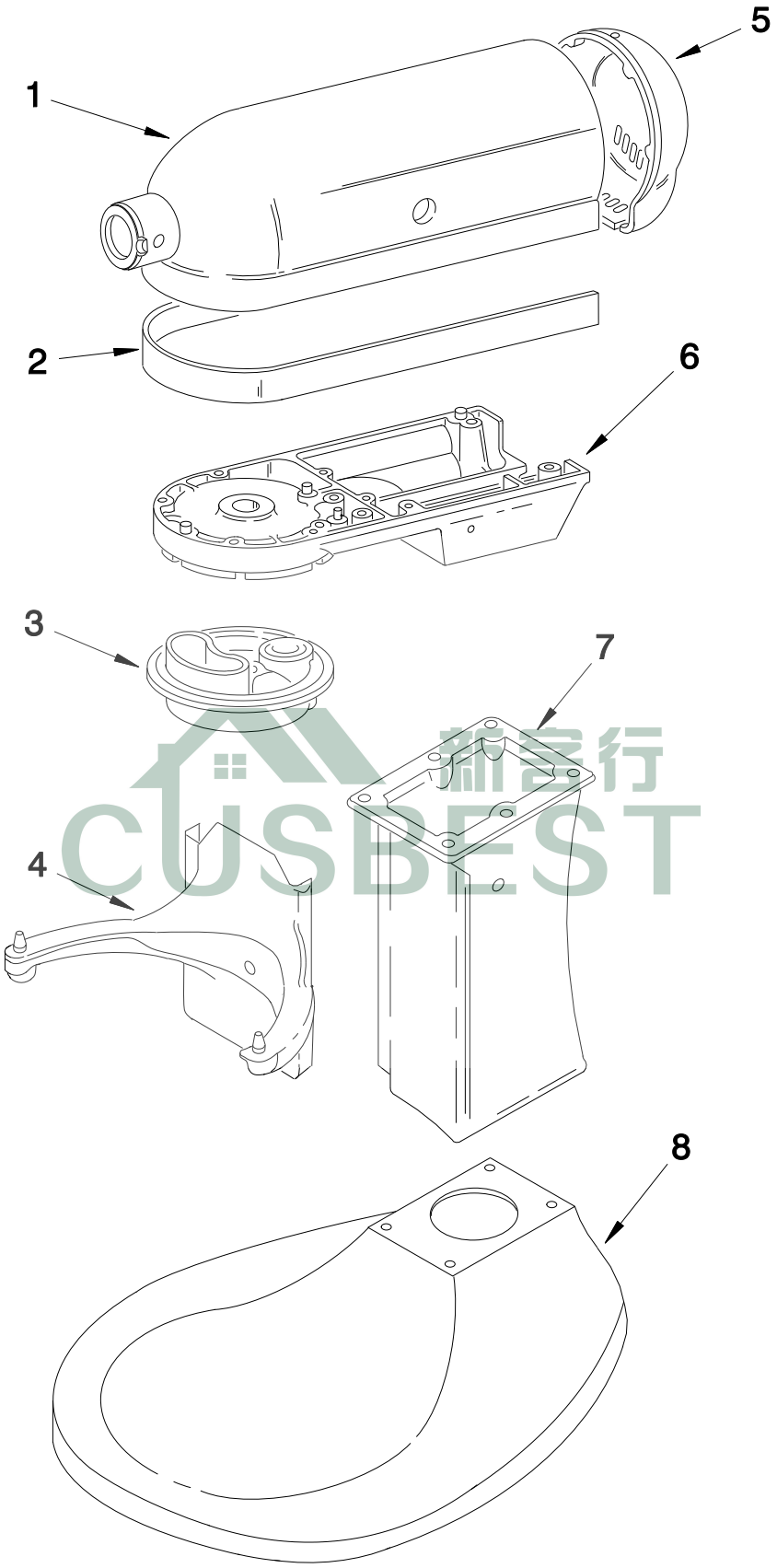

CUSBEST

COLOR VARIATION PARTS

Illus. No.	Part No.	Description
1		Motor Housing
	240291-1	White
	240291-21	Empire Red
2		Trim Band
	W10474763	Black
3		Planetary
	240286-1	White
	240286-23	Empire Red
4		Bowl Supprt & Pins
	3179300	White
	3179318	Empire Red
5		End Cover
	240253-1	White
	240253-22	Empire Red
6		Lower Gearcase
	9701508	White
	W10218387	Empire Red
7		Column
	240148-4	White
	9702393	Empire Red
8		Base & Foot Assembly
	3179280	White
	3179299	Empire Red

新客行
CUSBEST